(No Model.)

C. A. EVARTS & E. FISHER.

SUSPENSION DEVICE.

No. 369,509. Patented Sept. 6, 1887.

Fig. 1

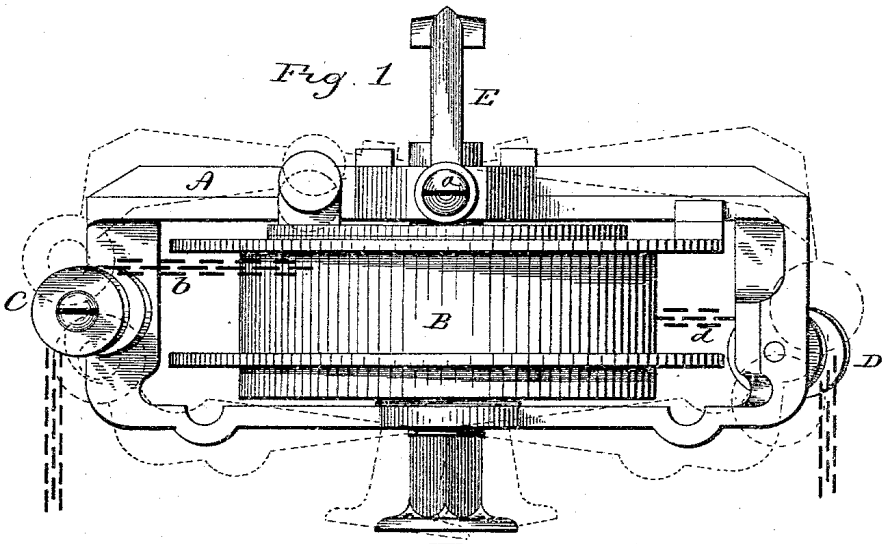

Fig. 2

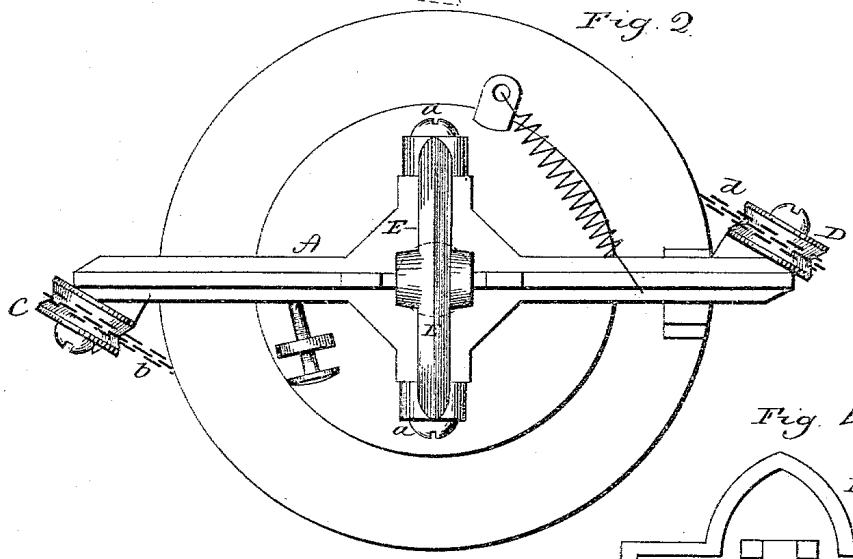

Fig. 4

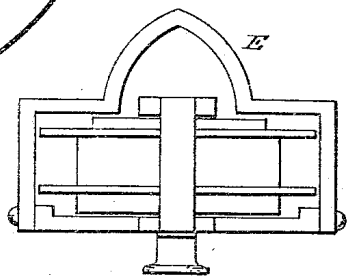

Fig. 3

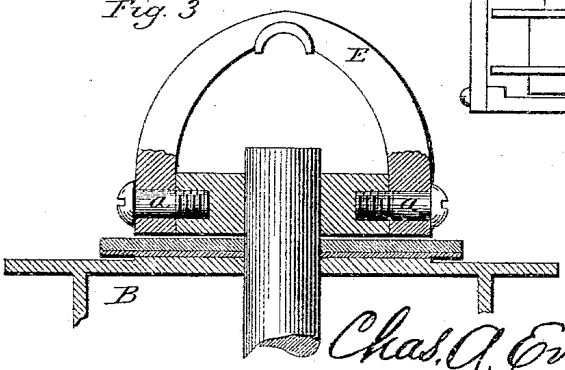

Witnesses,
J. R. Shumway.
Fred C. Earle

Chas. A. Evarts
and Emil Fisher,
Inventors,
By Atty's
Wm. C. Earle.

N. PETERS. Photo-Lithographer, Washington, D. C.

UNITED STATES PATENT OFFICE.

CHARLES A. EVARTS AND EMIL FISHER, OF MERIDEN, CONNECTICUT, ASSIGNORS TO THE BRADLEY & HUBBARD MANUFACTURING COMPANY, OF SAME PLACE.

SUSPENSION DEVICE.

SPECIFICATION forming part of Letters Patent No. 369,509, dated September 6, 1887.

Application filed November 4, 1886. Serial No. 217,975. (No model.)

To all whom it may concern:

Be it known that we, CHARLES A. EVARTS and EMIL FISHER, of Meriden, in the county of New Haven and State of Connecticut, have invented a new Improvement in Suspension Devices for Lamps; and we do hereby declare the following, when taken in connection with accompanying drawings and the letters of reference marked thereon, to be a full, clear, and exact description of the same, and which said drawings constitute part of this specification, and represent, in—

Figure 1, a side view of the suspension device complete; Fig. 2, a top view of the same; Fig. 3, a horizontal sectional view cutting through the pivots of the loop; Fig. 4, a modification.

This invention relates to an improvement in that class of suspension devices for chandeliers, lamps, &c., in which the counter-balance for the lamp consists of a spring-drum around which the suspending-chains run, and so that in drawing down the lamp the spring is wound, and the reaction of the spring aids in lifting the lamp, and particularly to that class in which the spring-drum is arranged in a horizontal plane—that is, upon a vertical axis—and in which two chains are employed, one running from the drum over a pulley at one side and the other chain from the drum over a pulley upon the diametrically-opposite side of the frame, the chains extending down and connected to the lamp or fixture below. The chains necessarily run several times around the drum, and it is found impossible to produce such a regular working of the chain upon the drum that a perfectly equal or uniform draft will be made upon the two chains—that is to say, because of the convolutions of the chains running upon each other sometimes one chain will be wound upon the drum more rapidly than the other, or vice versa. The result of such irregular winding is to draw upon one side of the lamp more than upon the other and turn it out of its proper plane. To overcome this difficulty eveners, or devices of an evener-like character, have been introduced between the suspension device and the lamp, so as to permit the irregular run of the chains without changing the plane of the lamp; but, generally speaking, these introduced devices detract from the symmetrical appearance of the apparatus as a whole.

The object of our invention is to overcome the difficulty of irregular running of the chains without the interposed evener; and it consists in a frame having a spring-drum arranged therein upon a vertical axis and so as to receive the chains, with two pulleys fixed to the frame diametrically opposite each other, and over which two pulleys the chains from the drum respectively run, combined with a suspending-loop hung to the frame upon an axis at substantially right angles to the diametrical line from one pulley to the other, and whereby the said frame is permitted to rock on the loop accordingly as the run of the chain from one side is greater or less than that upon the opposite side, as more fully hereinafter described.

A represents the frame, which is of substantially the usual form, and within which the spring-drum B is arranged in the usual manner upon a vertical axis, and so that the drum will revolve in a horizontal plane. The spring of the drum is not shown, and is too well understood to require description further than to say that it is a common and well-known construction; and the spring within the drum is fixed to the fixed axis of the drum, the other end of the spring fixed to the drum itself, so that as the drum revolves in one direction around the axis the spring will be wound, and then the reaction of the spring will cause the drum to revolve in the opposite direction.

Upon the frame at one side is a pulley, C, over which one of the chains, *b*, runs. D is a like pulley upon the opposite side of the frame, over which the other chain, *d*, runs, the said two pulleys being diametrically opposite each other. These pulleys act as guides for the chains, and in this relative position to each other are the same as heretofore employed in this class of fixtures.

Upon the upper side of the frame and at the center a suspending-loop, E, is arranged. This loop is of inverted-U shape and spans the central portion of the frame. Its two ends

are hung upon pivots *a a* in the frame, the axial line of the pivots being at substantially right angles to the diametrical line through the pulleys—that is, at right angles to a plane through the two descending chains. The loop thus hung to the frame leaves the frame free to swing or rock upon the loop, the plane of the rocking being parallel with the plane of the chains, so that the frame with the spring and pulleys may be turned out of its natural plane in either direction, as indicated in broken lines, Fig. 1.

The chains are attached directly to the lamp in the usual manner. The natural tendency of the lamp is to stand in its proper horizontal plane if permitted so to do. Now, if the chains run equal and are equally wound upon the drum, the drum and the frame will stand in their natural horizontal plane; but if in lifting the lamp the chain—say at the right—is wound more rapidly upon the drum than at the left, thereby naturally lifting the right-hand side of the lamp faster than the left, the frame, drum, and pulleys will correspondingly turn down at the left, as indicated in broken lines, to the extent of the differential winding of the chains, and without change of the level or horizontal plane of the lamp. If the more rapid winding be at the left, then the right-hand side of the frame will drop, as indicated in broken lines; but in any case the frame carrying the drum and the pulleys will rock upon the loop to adapt itself to the differential running of the chains, and so as to always maintain the lamp in the proper horizontal level.

It is desirable to spread the loop to a considerable extent, so that the pivots upon which it is hung may be at a considerable distance apart; but the extent to which the loop is so spread is not essential to the invention; and while we prefer to hang the loop to the frame above the drum, the loop may span the drum and be pivoted to the frame below the drum, as shown in Fig. 4, it only being essential that the axis upon which the loop is hung to the frame shall be at substantially right angles to the plane of the two descending chains.

By the term "chains" it will be understood that we include cords or other known equivalents therefor.

In the illustrations we show common frictional devices applied to the drum, not necessary, however, to be described.

We claim—

1. The combination of a frame, a spring-drum hung in said frame upon a vertical axis and so that said drum will revolve in a horizontal plane, two guide-pulleys hung to said frame diametrically opposite each other, chains attached to said drum and running, respectively, over said pulleys and downward therefrom, with a loop hung to said frame upon an axis at right angles to the plane of the descending chains, substantially as described.

2. The combination of the frame A, the spring-drum B, hung within said frame in a horizontal plane and upon a vertical axis, pulleys C D, fixed to the frame at substantially diametrically opposite points, chains running from said drum, respectively, over said pulleys C D as guides, with an inverted-U-shaped loop, E, above the drum, the two legs of the loop hung to the frame upon pivots, the axial line of which pivots is at substantially right angles to the plane of the chains descending from said pulleys, substantially as described.

CHARLES A. EVARTS.
EMIL FISHER.

Witnesses:
FRANCIS B. FAIRBANKS,
HORACE S. SAVAGE.